ART. 3550

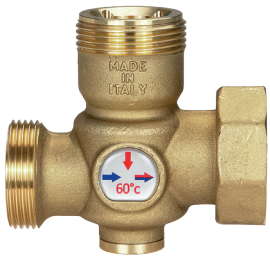

VALVOLA TERMOSTATICA ANTICONDENSA

- Temperature di taratura: 60°C standard (su richiesta 50°C, 55°C e 65°C, 70°C)
- Temperatura massima: 110° C
- Range apertura / chiusura: ±5°C
- Attacco pompa diretto con dado

ANTI-CONDENSATION VALVE WITH THERMOSTATIC CONTROL

- *Temperature calibration: 60°C standard (available 50°C, 55°C and 65°C, 70°C)*
- *Max temperature: 110° C*
- *Starting opening / closing range: ±5°C*
- *Connection to the pump direct with the nut*

DN20: **Kvs 3,2**

DN25: **Kvs 5,8**

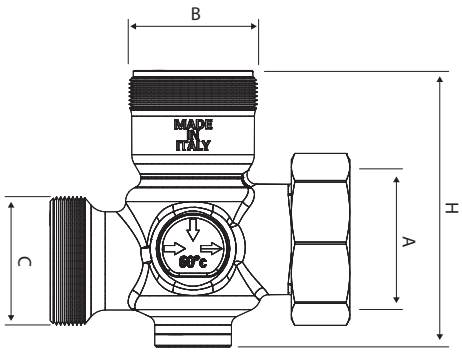

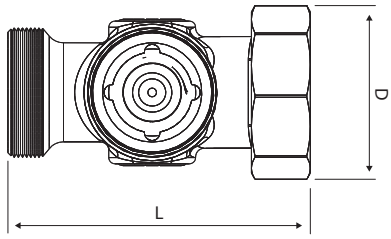

ART	COD.	°C	DN	A	B	C	D	L	H
3550 1”	C0105009-50	50°	20	1” F	1” F	1” M	38	80	74
	C0105009-60	60°							
	C0105009-65	65°							
	C0105009-70	70°							
3550 1” 1/4	C0105550-50	50°	25	1” ½ F	1” ¼ F	1” ¼ M	53	99	89
	C0105550-55	55°							
	C0105550-60	60°							
	C0105550-65	65°							
	C0105550-70	70°							

KIT TERMOSTATICO / THERMOSTATIC		
1”	50°C	C0505078
	60°C	C0505079
	65°C	C0505080
	70°C	C0505081
1”1/4	50°C	C0505083
	55°C	C0505084
	60°C	C0505085
	65°C	C0505086
	70°C	C0505087

Valvola a 3 vie termostatica per gestione anti-condensa su generatore a biomassa. Le valvole possono essere collegate direttamente al circolatore allo scopo di ottimizzare lo spazio e la loro asimmetria permette di avere montaggio anti-errore.

3-way thermostatic valve for anti-condensation management of biomass generator. The valves can be connected directly to the circulating pump in order to optimize the space and the asymmetry allows them to have anti-mounting error.