NOVACOND 120A

ART. 26120A

Function

NOVACOND is an hydraulic module for the management of two heating circuits at different temperatures, one direct and one mixing, with specific application for condensing boilers.The direct circuit is managed by the boiler pump while the mixing circuit with an additional pump and a 4-port mixing valve is able to circulate the return water from the direct circuit to the mixing circuit flow.

Technical data

Nominal diameter	DN15
Max pressure	4.5 bar - 3 bar with safety valve on generator
Max operating temperature	95°-110° Peak
Min operating temperature	+5°
Fluid	Water-water + glycol max 30%
Valves on the system side	DN20
Thermometers	0-120°C
Non-return valve op.pressure	ΔP:2kPa(200mm approx)
External dimensions	400x450x160 mm
Protection rating	IPX0D
Pipes	Copper Ø 18 mm
Generator connection	3/4"M
Center distance	210 mm
Heating connections	3/4"F
Center distance	70 mm
Max flow rate	1000 l/h
Max power ΔT 20°C	20 kW
Residual head at 1000 l/h	*
Single electrical consumption	/

Mixed zone

Circulator	Grundfos UPM3 Hybrid 15-70 Erp ready*
Mixing valve	Mod. ART.3608 - 1"M
Mixing valve motor	NVM230V - 3pt/0-10V
Max flow rate	1500 l/h**
Max power	15 kW
Residual head	5.2 m.w.c.
Electrical consumption	max 56 W*

* Generator characteristics reference

** Reference with residual pressure 2 m.w.c.

Materials

Pipes	Copper
Casing	FE painted
Circulators	Cast iron
Components	Brass / CW617N

Dimensions

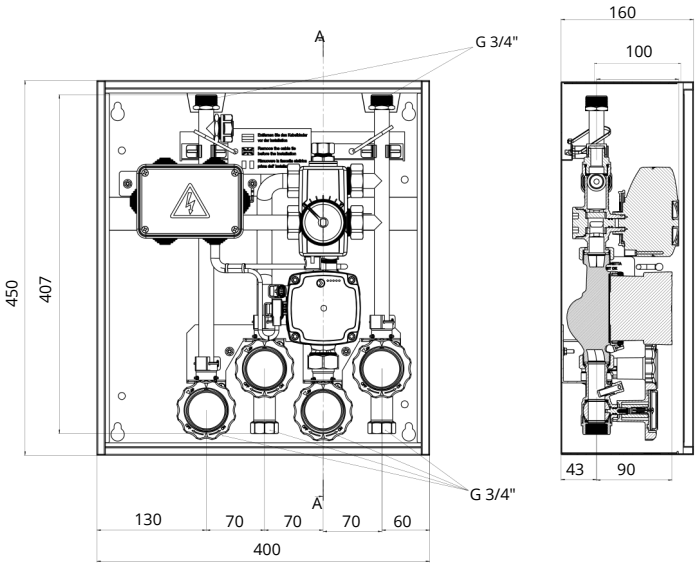

Composition

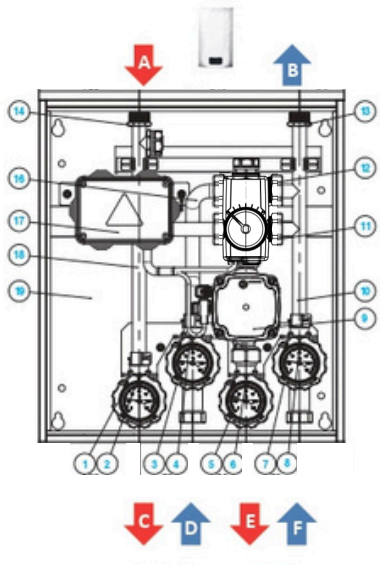

1) Supply valve zone 1
2) Probe holder supply zone 1
3) Return valve zone 1
4) Probe holder return zone 1
5) Supply valve zone 2
6) Probe holder supply zone 2
7) Return valve zone 2
8) Probe holder return zone 2
9) Circulator zone 2
10) Return pipe zone 2
11) Motor mixing valve 6-way zone 2
12) Mixing valve 6-way zone 2
13) Return connection generator
14) Supply connection generator
15) /
16) Return pipe zone 1
17) Return box zone 1
18) Return pipe zone 1
19) Electrical box
20) /

A) Heat generator supply
B) Heat generator return
C) Heating supply direct zone
D) Heating return direct zone
E) Heating supply mixed zone
F) Heating return mixed zone

Certifications

Product compliant with:
- EN 16297-2 / EN 16297-3:2012 ErPReady
- PED Directive – 2014/68/EU

Accessories

CIRCULATOR UPM3

CIRCULATOR UPM3 HYBRID 15/70 - 130
(Cod. CF105336)

THERMOSTATIC MIXING VALVE

THERMOSTATIC MIXING VALVE VTA 372 20–55 °C
(Code CF105119)

RED AND BLUE HANDLE

- 3/4M x 3/4F RED HANDLE (Cod. 10305138)
- 3/4M x 3/4F BLUE HANDLE (Cod. 10305142)

BLU VALVE

DN20 QUICK CONNECT VALVE x 3/4"F HANDLE WITH BLUE THERMOMETER
(Code 10405012)

RED VALVE

DN20 1"F x 3/4" F VALVE HANDLE WITH RED THERMOMETER
(Code 10405011)